CUPOWER

ID ECSCI 42/230/300-1050 DALI NFC B

Art.167142

Product features

- Isolated adjustable power LED driver
- Supports DALI-2, push DIM control
- Current adjustment via NFC
- Supports i-Data function (DALI part 251, 252, 253)
- Output current 300…1050 mA
- Max. output power 42 W
- DC emergency
- Flicker-free, dimming range 1%...100% (amplitude dimming)
- Current output default value 100%
- For luminaires with protection class II

Product specifications

167142 ID ECSCI 42/230/300-1050 DALI NFC B

Output current	Input voltage	Output voltage	Efficiency @ full load	Current accuracy	Power factor @ full load	Dimension L x W x H (mm)
300…1050 mA	220…240 Vac 220…240 Vdc	9…42 Vdc	89% (@ 40 V 1050 mA)	± 5%	0.9 (Output Power >15 W @ 230 Vac 50 Hz)	208.2 x 31.1 x 42.2

Electrical specifications

Mains voltage supply

Rated input voltage range	220…240 Vac
Max. input voltage range	198...264 Vac
Rated frequency range	0/50/60 Hz
Max. input current	0.22 A @ 230 Vac & 0.22 A @ 230 Vdc

Battery operation

DC voltage range	220...240 Vdc
Max. DC voltage range	176…280 Vdc

Protection against voltage peaks

Withstand voltage	I/p-O/p: 3 kVac, < 5 mA 60 sec, I/p-Da: 1.5 kVac, < 5 mA 60 sec, O/p-Da: 1.5 kVac, < 5 mA 60 sec
Mains surge immunity	L-N 1 kV

Total harmonic distortion (THD)

At rated input voltage range @ full load	≤ 10%

Hunan Xiezhen Electronics Co., Ltd.
Block A&B, Building 11, Innovation Park Linyi Road,
BailLutang Town Suxian District, Chenzhou, Hunan - China

CUPOWER Europe GmbH
Ahornweg 5a
58675 Hemer - Germany

Version: 20250707

www.cupower.com

Errors excepted. We reserve the right to make alterations in the interest of improving our products.

Output data

Output current tolerance	± 5% at rated input voltage range
No load output voltage	≤ 55 Vdc
Ripple output current	5% (ripple = peak/average total 100 Hz)
Output PstLM	≤ 1 at full load @ rated input voltage
Output SVM	≤ 0.4 at full load @ rated input voltage
DC emergency level	DALI current output decreased to 15% (programmable)

Protection functions output side

Overvoltage protection	The output voltage is less than or equal to 55 V
Overpower protection	The output power is less than or equal to 47 W
Short circuit protection	Protection device will trigger when short circuit and will auto recover after the fault mode is removed.

Dimming operation and interface

Standby power consumption	< 0.3 W
Dimming mode	DALI-2, push dimming
Dimming method	Amplitude dimming
Dimming current range	1%...100%

Connection terminals

Connection terminal type	The output terminal is a 45° push-in terminal
Wire cross section	Output wire: 0.5…1.5 mm²
Wire stripping length	8…9 mm

Degree of protection

Protection rating	IP20

Operating data

Output current range	NFC control adjusts the current: 300…1050 mA
Default current	300 mA
Output voltage range	9…42 Vdc

Circuit breaker / Inrush current

MCB loading quantity	Inrush current Ipeak: 27.5 A			Inrush current Twidth: 135 µs	
	MCB type	B10	C10	B16	C16
	Units	28	37	46	59

Supplementary instructions

- The luminaire manufacturer is responsible for measuring and verifying the EMI compliance of the complete luminaire, as the level of radio interference will vary depending on the luminaire construction. Especially primary and secondary cable lengths and their routing may have a significant effect on radio interference.
- For the push DIM function, please follow our instructions, which can be downloaded from www.cupower.com.
- The recommended NFC communication distance： 5...20 mm.

Hunan Xiezhen Electronics Co., Ltd.
Block A&B, Building 11, Innovation Park Linyi Road,
BailLutang Town Suxian District, Chenzhou, Hunan - China

CUPOWER Europe GmbH
Ahornweg 5a
58675 Hemer - Germany

Version: 20250707

www.cupower.com

Errors excepted. We reserve the right to make alterations in the interest of improving our products.

Environmental specifications

Operating temperature	-20… +35°C
Storage temperature	-25… +85°C
Working humidity	10%…90%
Store humidity	5%…95%
Lifetime	at Tc 85°C: 50,000 hrs; at Tc 75 °C: 100,000 hrs; @ 230 Vac
Maximum Tc temperature	85°C

Safety & EMC compliance

ENEC+CE	CCC	SAA
EN 300 330 V2.1.1:2017	/	AS/NZS 61347.1:2016+A1:2018
EN 62479:2010	/	AS 61347.2.13:2018
EN 50663:2017	/	
EN 301 489-1 V2.2.3:2019	/	
EN 301 489-3 V2.3.2:2023	/	
EN IEC 55015:2019/A11:2020	/	
EN IEC 61547:2023		
EN IEC 61000-3-2:2019/A1:2021		
EN 61000-3-3:2013/A1:2019/A2:2021		
EN 61347-1:2015/A1:2021		
EN 61347-2-13:2014/A1:2017		
EN 62493:2015/A1:2022		

Compatible Track

Manufacturer/trademark	Model
Powergear	PRO-06XX
GLOBAL	XTSC 6xxx
GLOBAL	XTSCF 6xxx
A.A.G STUCCHI	9000A series
EUTRAC	XX-Y XX-Y 19-XX-Y
Unipro	T3XXXseries
ZUMTOBEL	S280ZZZZ
IVELA	75XX-XX-XX
iGuzzini	P2XX
XAL	MOVE IT PRO series

Hunan Xiezhen Electronics Co., Ltd.
Block A&B, Building 11, Innovation Park Linyi Road,
BailLutang Town Suxian District, Chenzhou, Hunan - China

CUPOWER Europe GmbH
Ahornweg 5a
58675 Hemer - Germany

Version: 20250707

www.cupower.com

Errors excepted. We reserve the right to make alterations in the interest of improving our products.

Accessories (optional)

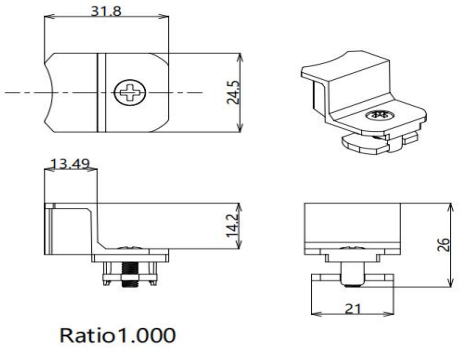

Art.	167838	XZ-TRACK-A B

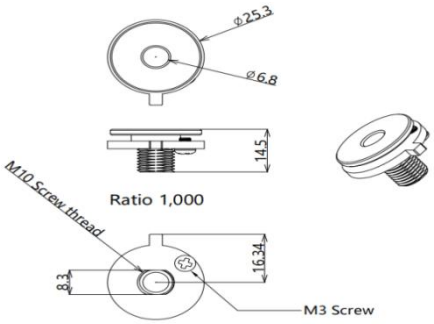

Art.	167852	XZ-TRACK-A1 B

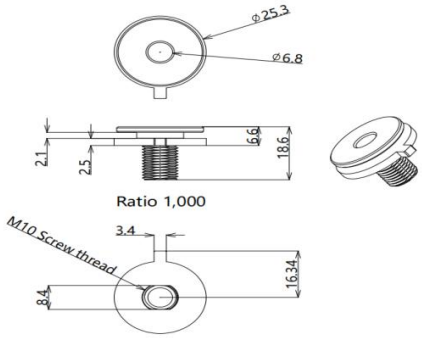

Art.	168132	XZ-TRACK-B B

Dimensions	Length (mm)	Width (mm)	Height (mm)
XZ-TRACK-A B	31.8	24.5	26
XZ-TRACK-A1 B	25.3	25.3	14.5
XZ-TRACK-B B	25.3	25.3	18.6

The first two accessories are designed for EL certification of the entire luminarie.
The third accessory is an optional threaded sleeve for luminarie installation.

Hunan Xiezhen Electronics Co., Ltd.
Block A&B, Building 11, Innovation Park Linyi Road,
BailLutang Town Suxian District, Chenzhou, Hunan - China

CUPOWER Europe GmbH
Ahornweg 5a
58675 Hemer - Germany

Version: 20250707

www.cupower.com

Errors excepted. We reserve the right to make alterations in the interest of improving our products.

Dimensions

Housing dimensions	
Length (L)	208.2 mm
Width (W)	31.1 mm
Height (H)	42.2 mm

For all dimensions: values in mm; tolerances: ± 0.5 mm

Packaging details	
Packing units	50 pcs
Carton size	315 x 219 x 250 mm
Carton weight	7.6 kg
Product weight	0.145 kg

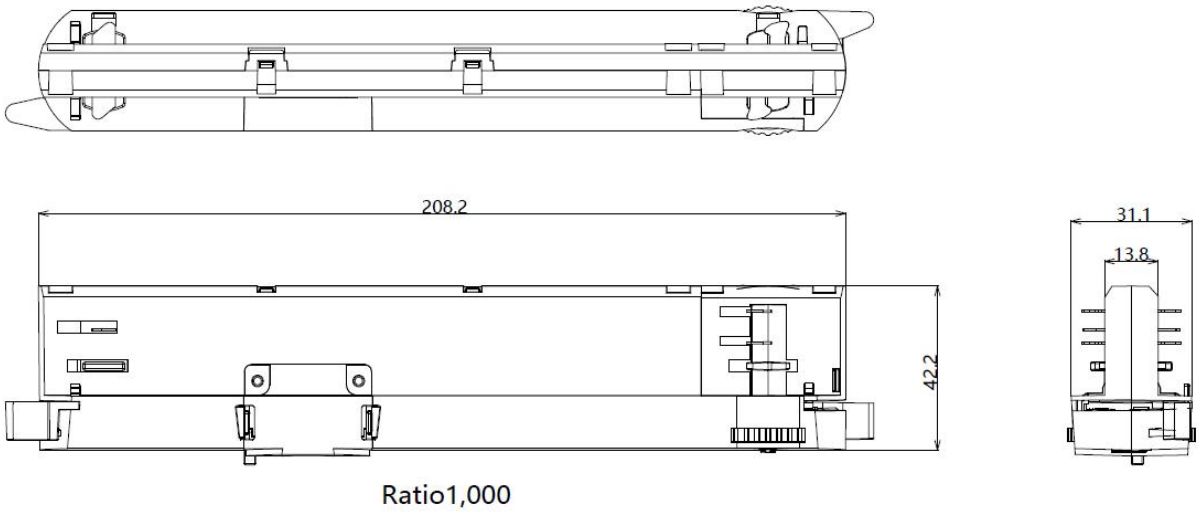

Wiring diagram

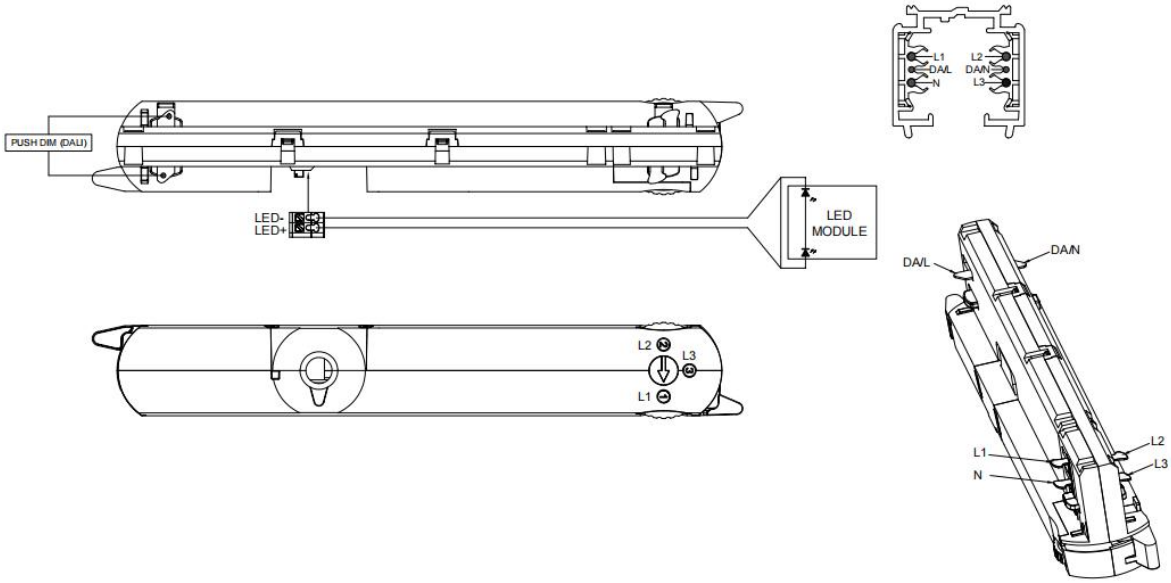

- All connections must be as short as possible to ensure good EMI performance.
- The luminaire wire should keep a certain distance from the LED power supply and other wires (5...10 cm is preferred).
- No secondary switches are allowed.
- Incorrect wiring can damage the LED.
- The wire must be well protected against short circuit.

Hunan Xiezhen Electronics Co., Ltd.
Block A&B, Building 11, Innovation Park Linyi Road,
BailLutang Town Suxian District, Chenzhou, Hunan - China

CUPOWER Europe GmbH
Ahornweg 5a
58675 Hemer - Germany

Version: 20250707

www.cupower.com

Errors excepted. We reserve the right to make alterations in the interest of improving our products.

Technical information

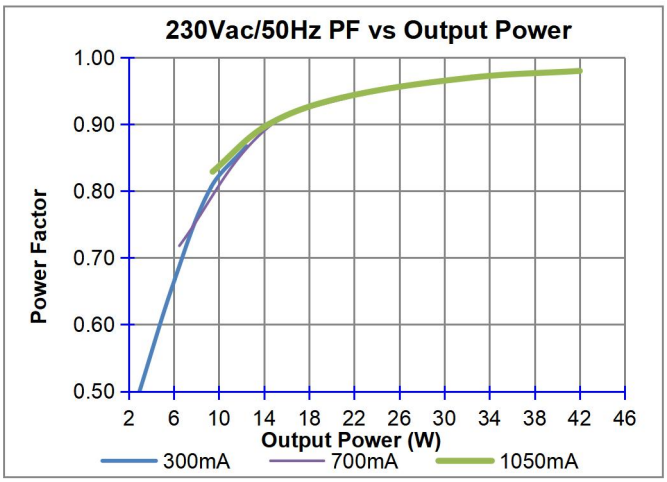

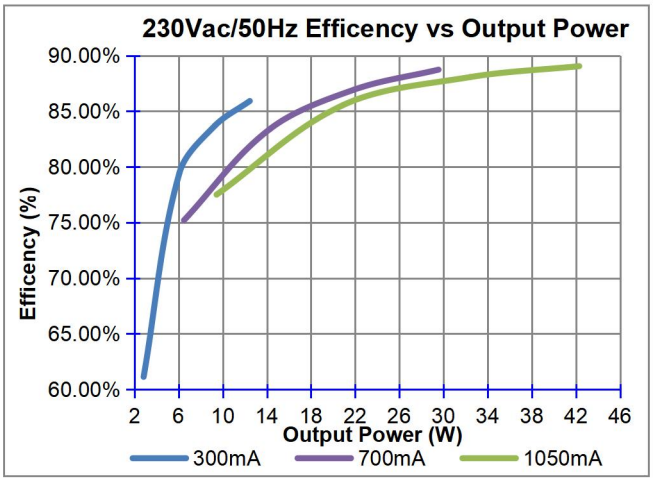

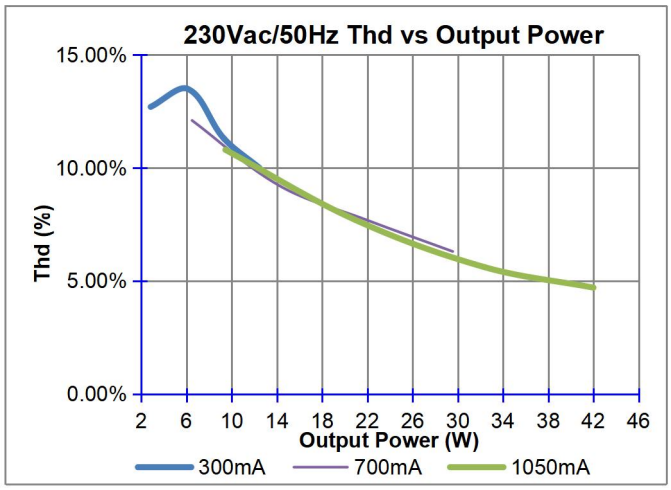

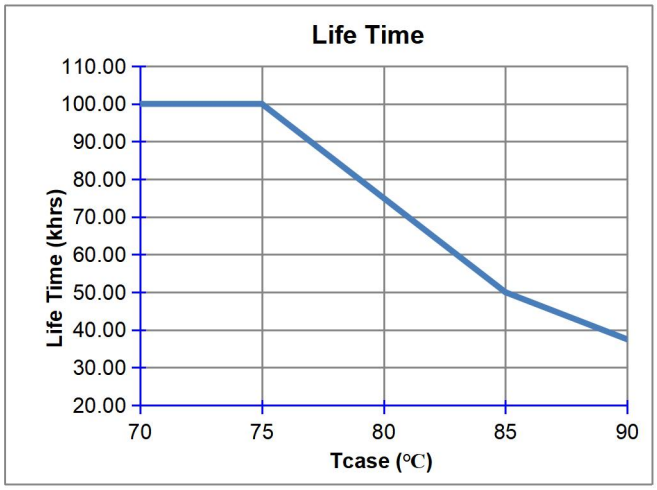

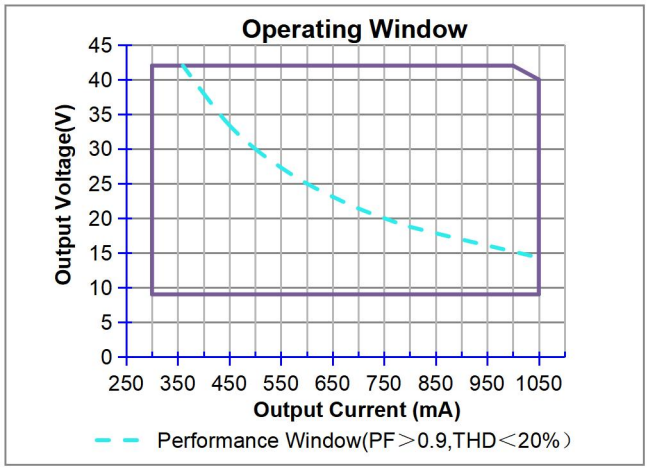

It's important to set the output current (AOC value) according to the LED voltage and make sure the power is within 42 W + 5%.

Example of AOC settings

V LED (Vdc)	AOC max	Pout (W)
42	1000 mA	42
40	1050 mA	42

Hunan Xiezhen Electronics Co., Ltd.
Block A&B, Building 11, Innovation Park Linyi Road,
BailLutang Town Suxian District, Chenzhou, Hunan - China

CUPOWER Europe GmbH
Ahornweg 5a
58675 Hemer - Germany

Version: 20250707

www.cupower.com

Errors excepted. We reserve the right to make alterations in the interest of improving our products.