CUPOWER

NAPPK DALI-0-10V-PWM-2CH-CAS

Art.167258

Product features

- 12...57 Vdc input
- This wireless control unit boasts two PWM dimmers for your 12...57 Vdc LED strips
- As well as two 0-10V dimming outputs and one DALI dimming output
- Commissioned via smart mobile app; compatible devices: IOS and Android operating systems
- Utilizes bluetooth mesh technology for reliable and secure wireless communication
- The device provides you with a variety of control options, a variety of control modes freely switch to choose

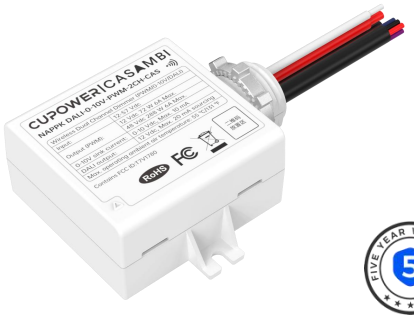

Electrical specifications

Mains voltage supply	
Rated input voltage range	12...57 Vdc
Max. input current	6 A
RF transmit power	+ 8 dBm
Wireless frequency	2.4 GHz
Wireless range (open air)	50 m

Control output	
Output voltage	12...57 Vdc
Ouput current (PWM)	12 Vdc 72 W 6 A MAX 24 Vdc 144 W 6 A MAX 48 Vdc 288 W 6 A MAX
Output voltage 0...10 V	0...10 Vdc
Output current 0...10 V	10 mA
Output voltage DALI	12 Vdc
Output current DALI	20 mA

Environmental specifications

Operating temperature	-20...+55 °C
Storage temperature	-25...+75 °C
Working humidity	10%...90%
Store humidity	5%...95%
Lifetime rating	50,000 hrs
Moisture and dust rating	IP20

Hunan Xiezhen Electronics Co., Ltd.
Block A&B, Building 11, Innovation Park Linyi Road,
BailLutang Town Suxian District, Chenzhou, Hunan - China

CUPOWER Europe GmbH
Ahornweg 5a
58675 Hemer - Germany

Version: 20250718

www.cupower.com

Errors excepted. We reserve the right to make alterations in the interest of improving our products.

Dimensions

Housing dimensions

Length (L)	2.76 in (70 mm)
Width (W)	2.68 in (68 mm)
Height (H)	1.06 in (27 mm)

For all dimensions: values in in/mm, tolerances: ± 0.5 mm

Packaging details

Packing units	40 pcs
Carton size	21.6 x 10.2 x 8.5 in (322 x 260 x 218 mm)
Carton weight	2.4 kg
Product weight	0.055 kg

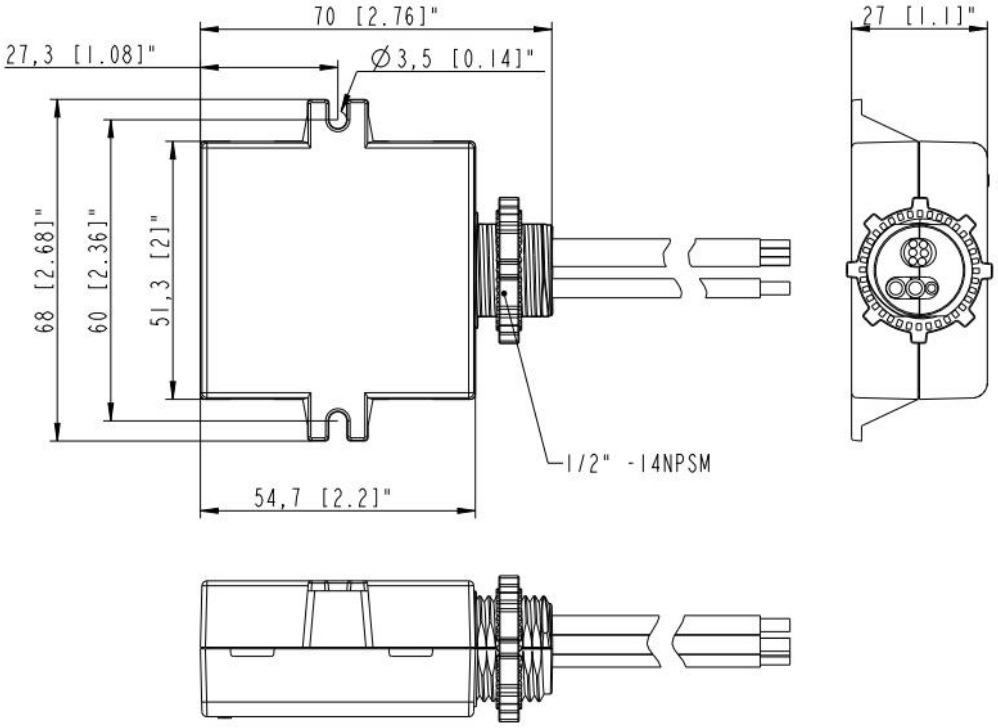

Hunan Xiezhen Electronics Co., Ltd.
Block A&B, Building 11, Innovation Park Linyi Road,
BailLutang Town Suxian District, Chenzhou, Hunan - China

CUPOWER Europe GmbH
Ahornweg 5a
58675 Hemer - Germany

Version: 20250718

www.cupower.com

Errors excepted. We reserve the right to make alterations in the interest of improving our products.

Wiring Diagram

12-57 Vdc LED strip

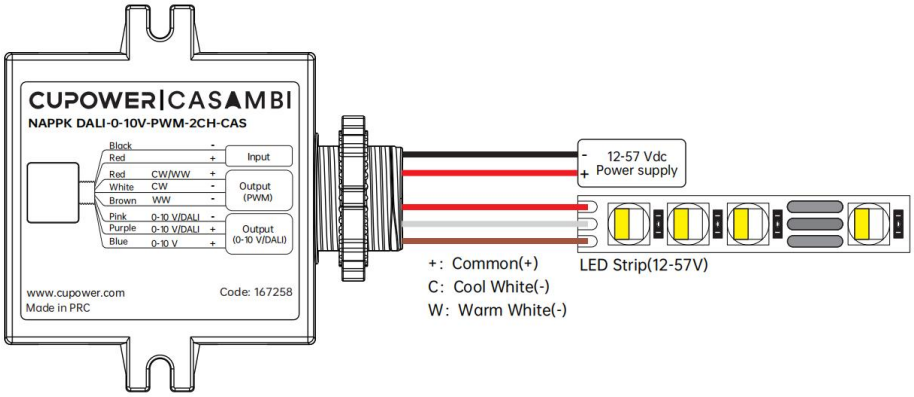

Control 0-10V dimmable drivers

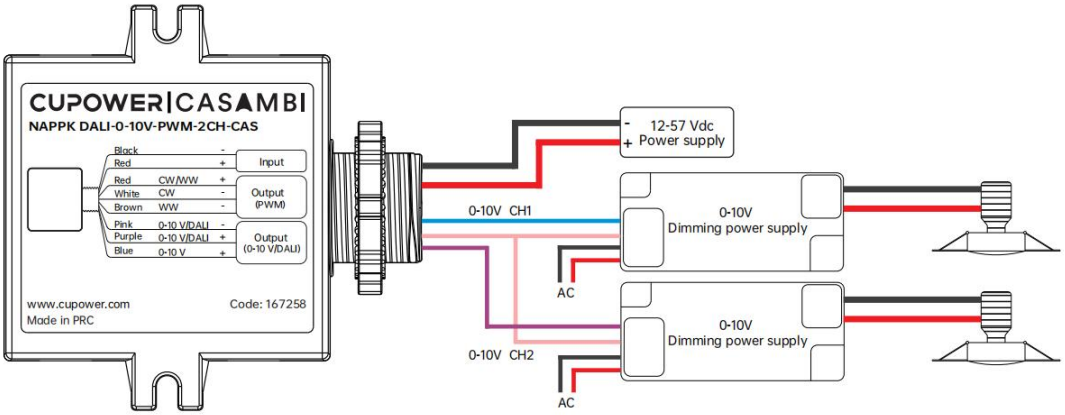

Control DALL dimmable drivers

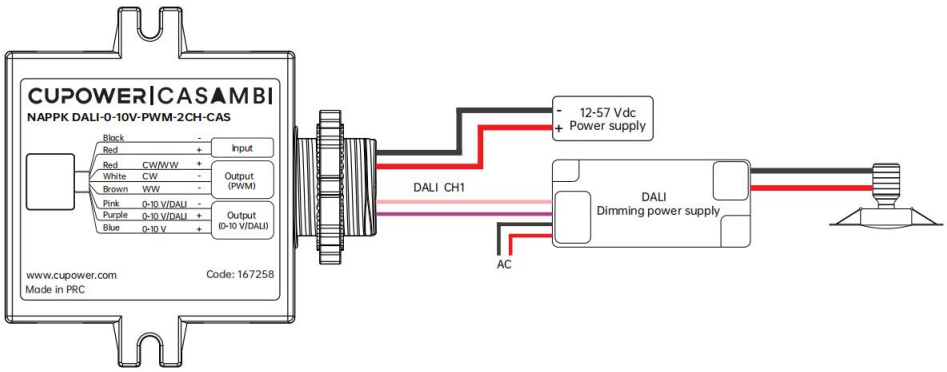

Hunan Xiezhen Electronics Co., Ltd.
Block A&B, Building 11, Innovation Park Linyi Road,
BailLutang Town Suxian District, Chenzhou, Hunan - China

CUPOWER Europe GmbH
Ahornweg 5a
58675 Hemer - Germany

Version: 20250718

www.cupower.com
Errors excepted. We reserve the right to make alterations in the interest of improving our products.

Wire Specifications

Name	Function	Color	Gauge	Type	Length	Strip Length
DC+	Positive input and Positive output	Red	18 AWG	Solid	6.49 in (165 mm)	0.31 - 0.39 in (8 - 10 mm)
DC+ 2	Positive input and Positive output	Red			6.49 in (165 mm)	0.31 - 0.39 in (8 - 10 mm)
DC-	Negative input	Black			6.49 in (165 mm)	0.31 - 0.39 in (8 - 10 mm)
LED- WW1	LED Negative output (warm)	Brown			6.49 in (165 mm)	0.31 - 0.39 in (8 - 10 mm)
LED- CW1	LED Negative output (cool)	White			6.49 in (165 mm)	0.31 - 0.39 in (8 - 10 mm)
GND	0...10 V/DALI-	Pink	22 AWG		6.49 in (165 mm)	0.31 - 0.39 in (8 - 10 mm)
OUT1	0...10 V/DALI+	Purple			6.49 in (165 mm)	0.31 - 0.39 in (8 - 10 mm)
OUT2	0...10 V+	Blue			6.49 in (165 mm)	0.31 - 0.39 in (8 - 10 mm)

- All connections must be as short as possible to ensure good EMI performance.
- No secondary switches are allowed.
- Incorrect wiring can damage the fixtures.
- The wire must be well protected against short circuit.

Hunan Xiezhen Electronics Co., Ltd.
Block A&B, Building 11, Innovation Park Linyi Road,
BailLutang Town Suxian District, Chenzhou, Hunan - China

CUPOWER Europe GmbH
Ahornweg 5a
58675 Hemer - Germany

Version: 20250718

www.cupower.com

Errors excepted. We reserve the right to make alterations in the interest of improving our products.